FILE COPY

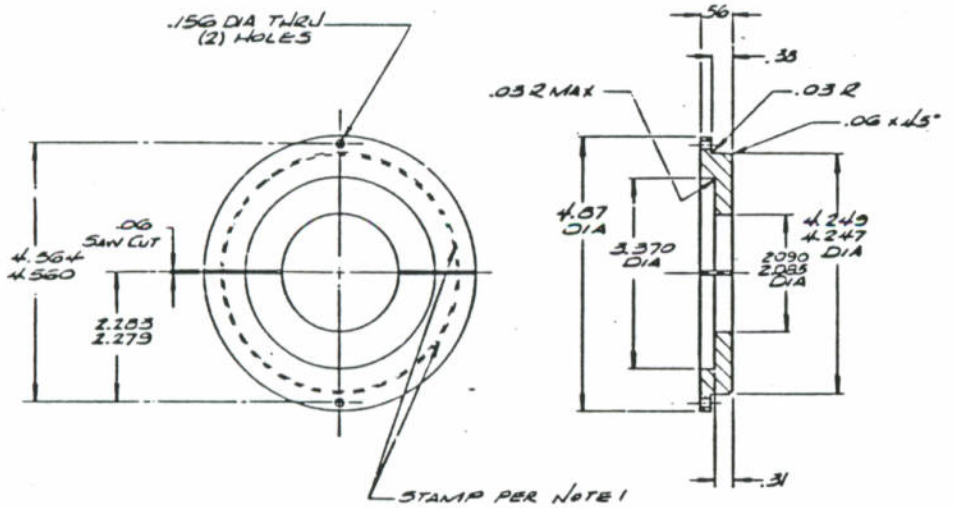

NOTES:

1. MARK AS SPECIFIED IN LOCATION SHOWN WITH 1/8 - 3/16 HIGH FIGURES THE FOLLOWING
   a) THE NAME "ALLISON" FOLLOWED BY THE TOOL NUMBER AND LAST CHANGE LETTER
   b) VENDOR NAME OR TRADEMARK.
2. 63/ FINISH ON ALL SURFACES U05
3. BLACK OXIDE PER AMS 2485

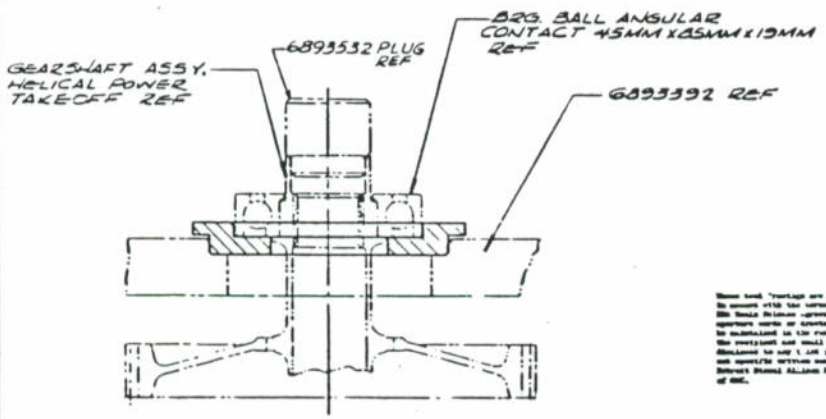

REDUCED PRINT

USED ON ENGINE MODELS
250 SERIES

BREAK SHARP EDGES .020 U05

GEOMETRIC CHARACTERISTIC SYMBOLS

MATL. SAE 4340

HEAT TREAT AND HARDNESS Rc 42-46

SURFACE TREAT See Note

REVISIONS

ZONE	LTR	DESCRIPTION	DATE	APPROVED

SAE 4340
AMS 2485

DRAWING PRACTICE
SURFACE TEXTURE
SCREW THREADS

Detroit Diesel Allison

TITLE PLATE - BRG PULLER, POWER TAKEOFF SHAFT REAR

SIZE D | CODE IDENT 73342 | DWG. No. 6893399

SCALE 1/1 | SHEET

6893399

REF—